# SOFT THERMAL CONTAINMENT

Triad Flooring

# THERMAL WALLS & DOORS

## 01

**APPLICATIONS:** Soft thermal containment isolates hot and cold air, helps eliminate hot spots, and ensures only the hottest air is returned to the CRAC unit. This facilitates lower set points, helps prevent down time, and can lengthen the life of IT equipment.

- Thermal Wall Curtains span the space between the tops of cabinet walls and the ceiling, and can also be used to create full length walls.
- Thermal Strip Doors fill spaces where people pass into and out of contained areas and can be customized for any aisle size.

## 02

**KEY FEATURES:**

- Custom built to any length or width; custom hanging options available
- Thermal links heat activated at 135°F or 165°F
- Fire rated vinyl curtain
- 90° radius corner track
- Aluminum track
- Twist clips for ceiling attachment
- Curtains overlap 4” on each side of joints to seal against other curtains or against cabinets and walls.

## 03

### WHAT SETS RLE’S CEILING CONTAINMENT APART?

- **Custom Made For Your Facility -** Every facility is unique and so is each containment project. Each of our containment solutions is custom manufactured. Before shipping, each job is precisely measured and verified to eliminate the need for cutting curtain track on the job.
- **Flexible options -** From ceiling to floor, ceiling to cabinet, or to fill gaps between cabinets, the flexible design of curtains is very appealing. Curtains can be cut to fit around ladder racks and other obstructions, and server racks and equipment can be moved in and out of a space without removing containment.

## 04

**SOFT CONTAINMENT SOLUTIONS WITH A QUICK ROI:** Soft containment products are a very affordable way to implement hot and cold aisle containment in any facility.

## 05

**SOFT THERMAL CONTAINMENT:** Custom solutions for hot and cold aisle containment.

| Measurements Needed For Soft Thermal Containment | |
|---|---|
| **Length of aisle** | Curtain corner kits include a 2 foot, 90° radius track for a continuous seal around corners. Each corner curtain will Width of aisle account for one foot of aisle length and one foot of aisle width. |
| **Width of aisle** | |
| **Cabinet height** | |
| **Ceiling type** | |
| **Distance from floor to ceiling** | |
| **Distance from top of cabinets to ceiling** | |

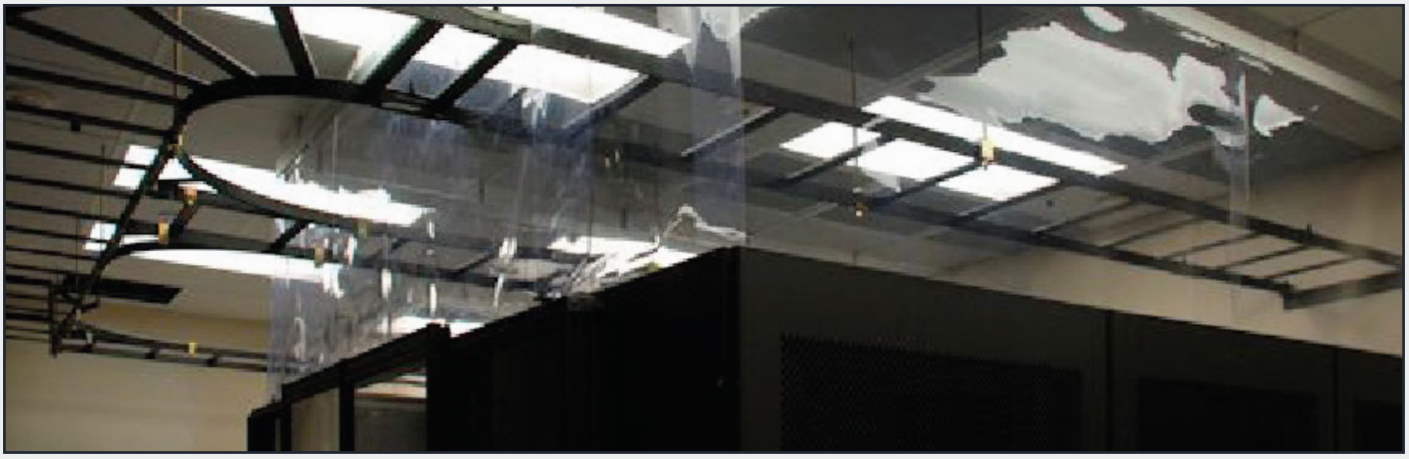

**Thermal Wall Curtains**

05

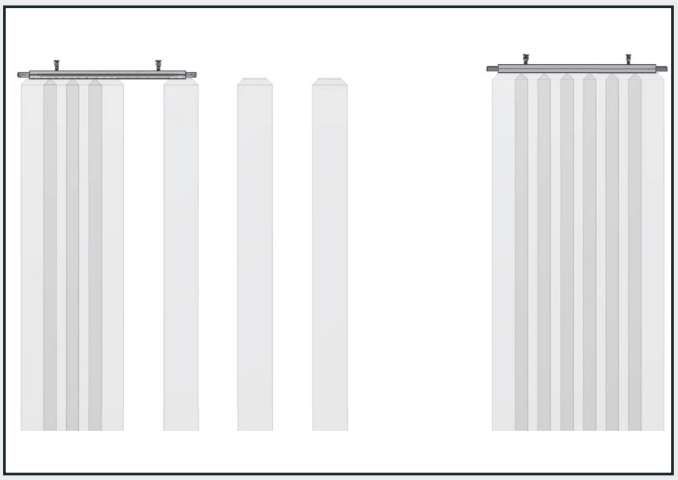

**Thermal Strip Doors**

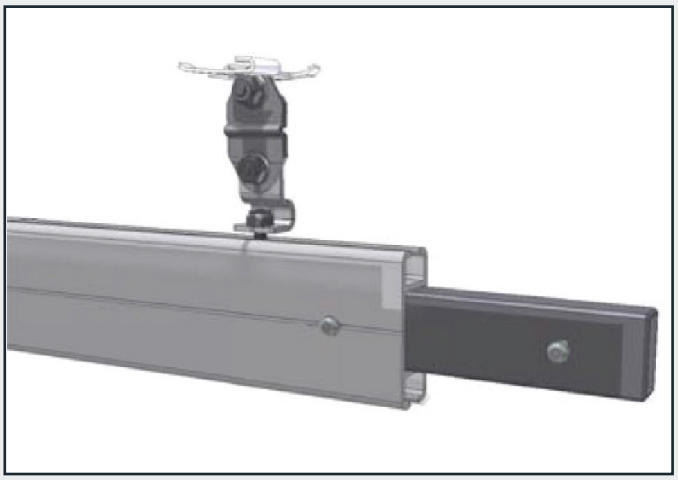

**Heat Activated Fusible Links**

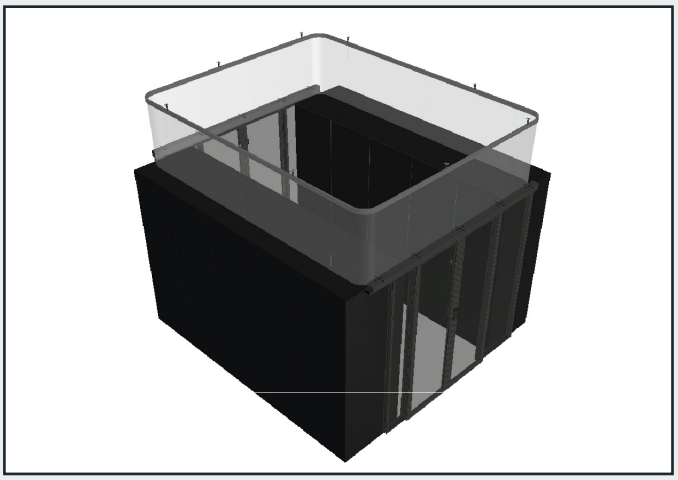

**Thermal Wall Curtains with Double Sliding Doors**

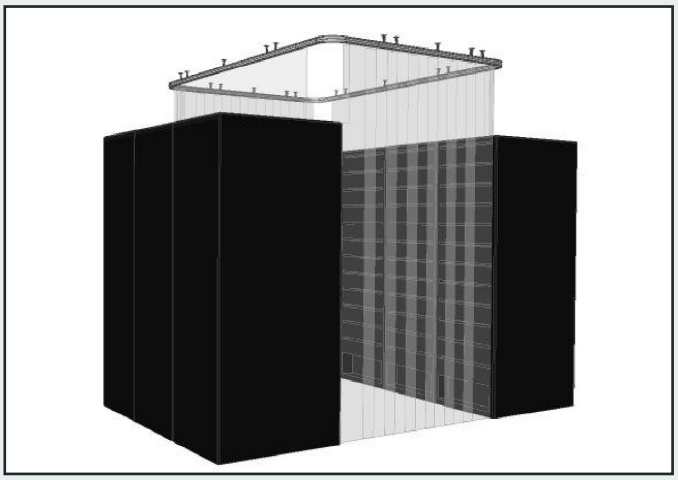

**Thermal Wall Curtains with Thermal Strip Doors**

| Technical Specifications | |
|---|---|
| **Clear Vinyl** | NFPA 701 passed |
| **Track** | 6091 T-5 Temper Aluminum |
| **UL Listed Fire Suppression Fusible Links**<br>Heat Activated at 135°F<br>Heat Activated at 165°F | <br><br>Minimum load: 3 lbs.; Maximum load 40 lbs.<br>Minimum load: 3 lbs.; Maximum load 45 lbs. |